PUBLIC WORKS DEPARTMENT
8047 W Main Street
Rathdrum, ID 83858
Ph: 208-687-2700
Fax: 208-687-1377
www.rathdrum.org
Building Department 208-687-2700 ext. 125/122
Planning and Zoning 208-687-2700 ext. 117

COMMERCIAL KITCHEN HOOD WORKSHEET/CHECKLIST

Two copies of this worksheet/checklist must accompany plan sets submitted with commercial kitchen range hood permit applications. It explains and organizes information needed by the Rathdrum Building Department to efficiently review plan and issue permits. The building department will keep this document as part of the permanent project file and will use it to verify code compliance. The applicant is responsible for assuring the accuracy and consistency of the information.

A. Project Address: _____

B. Established use and history of building

Is it an existing restaurant, food processing area or food service area: ☐ Yes ☐ No

If no, provide Tenant Improvement permit number: _____

C. Location of exterior ductwork and mechanical equipment

1. Is ductwork or mechanical equipment located outside of building other than roof top? ☐ Yes ☐ No
2. Applicant shall provide plan and elevation views showing ductwork, duct enclosure, hood, cooking surface air supply, exhaust system, and equipment support including structural detail (See attached examples 1, 2 and 3).

D. Type of Hood

1. For grease and smoke removal: Type I _____ Quantity
   (Example: deep fryer, char broilers, grill, ovens and all solid-fuel appliances)
2. For steam, vapor, heat or odor removal: Type II _____ Quantity
   (Example: steamer, soup kettle and dishwashers)
   Hood shall have a permanent, visible label identifying it as a Type II hood.
3. Domestic cooking appliances used for commercial purposes ☐ Yes ☐ No
   (see Sec. 507.2.3 & Table 507.2.2 SBCC Amendments, 2012 IMC)
4. Is hood for solid-fuel cooking equipment? ☐ Yes ☐ No
   If yes, a separate exhaust system is required.

E. Type of material and gage (507.4, 507.5) _____

	TYPE I HOOD			TYPE II HOOD	
		Gage		Gage	
	Type of Material	Min. Req.	Proposed	Minimum Req.	Proposed
Duct and Plenum	Stainless Steel	18 Ga.	_____ Ga.	26 Ga. Up to 12" Diameter	_____ Ga.
	Galvanized Steel	16 Ga.	_____ Ga.	22 Ga. Up to 30" Diameter	_____ Ga.
Hood	Stainless Steel	20 Ga.	_____ Ga.	Stainless Steel 24 Ga.	_____ Ga.
	Galvanized Steel	18 Ga.	_____ Ga.	Galvanized Steel 22 Ga.	_____ Ga.
Flashing	Stainless Steel	22 Ga.	_____ Ga.	NOT REQUIRED	
	Galvanized Steel	22 Ga.	_____ Ga.		

F. Hood Type – Size -- Location(507.12, 507.14)

1. Canopy hoods shall extend a minimum of 6" beyond cooking surface.

Type of hood proposed: ☐ Canopy ☐ Non-canopy

Vertical distance between lip of hood and cooking surface (see exception Sec 507.12) Proposed: Canopy _____ ft. 4 ft. maximum allowed Non-canopy _____ft. 3 ft. maximum allowed

2. Complete part "i" for listed hood **or** part "ii" for unlisted hood.

i) Listed hood. Make and model No.: _____ Listed CFM _____

Provide manufacturer's installation instructions and listing documents for listed hoods and grease ducts.

ii) Unlisted hood: Quantity of air = Lineal ft. of hood front X CFM from Table below

= _____ ft. X _____ $\frac{\text{CFM}}{\text{ft.}}$ = _____CFM

Minimum net airflow for different types of unlisted hood. (507.13.1)

Identify the cooking appliances and circle the CFM applied. Where any combination of cooking appliances are utilized under a single hood, the highest exhaust rate required by this table shall be used for the entire hood.

	Hood Exhaust CFM Table	*CFM / lineal ft. of hood front
1)	Extra heavy-duty cooking appliances (non-canopy hood not allowed) Type I hood e.g. All solid-fuel including solid-fuel pizza oven.	550
2.	Heavy-duty cooking appliances Type I hood e.g. wok, broiler (gas or electric), gas burner range.	400
3.	Medium-duty cooking appliances Type I hood e.g. all solid-fuel including solid-fuel pizza oven, electric or gas conveyer pizza ovens, griddles, rotisseries, and fryers.	300
4.	Light-duty cooking appliances (e.g. pizza oven, pastry oven, gas and electric ovens, pasta cookers, steamers, and Type II hoods)	200
5.	Exhaust flow rate label. Type I hoods shall bear a label indicating the minimum exhaust flow rate in cfm per linear foot of hood that provides for capture and containment of the exhaust effluent for the cooking appliance duty classifications defined in this code-Sec. 507.2.1.2	
6.	Air velocity. Type I hood shall be designed and installed to provide an air velocity of not less than 500 feet per minute-see exception: Sec. 506.3.4	

G. Exhaust duct system (506.3.4)

1. Applicant shall provide the specified air velocity in exhaust duct.
2. Duct size _____ in. X _____ in., duct area = $\frac{\text{_____ in. x _____ in.}}{144}$ = _____ ft²

Type of Hood		Air Velocity (FPM)	CFM/Duct Area (ft²)	Proposed Air Velocity
1.	I	Req. minimum 500 fpm	_____ / _____ =	_____ FPM
	II	Req. minimum 500 cfm	_____ / _____ =	_____ FPM

2. Static pressure loss

duct _____ in. + grease filters/extractor _____ in. + other _____ in. = Total _____ In. of H_2O

3. Fan and Motor shall be of sufficient capacity to provide the required air movement. Fan motor shall not be installed within ducts or under hood.

Fan make and model _____ HP _____

Static pressure _____ in. at _____ cfm.

IF USING A LISTED DUCT WRAP, THE SURFACE OF THE DUCT SHALL BE CONTINUOUSLY COVERED ON ALL SIDES FROM THE POINT THE DUCT ORIGINATES TO THE OUTLET TERMINAL-SEC. 506.3.11

H Exhaust outlet location (506.3.13)

			Min. required	Proposed
1.	Exhaust discharge outlet shall terminate above roof	Type I Type II	40 in. 30 in.	_____ in.
	Distance from walls in the same or adjacent building		10 ft.	_____ ft.
	Distance above adjoining grade	_____ ft.	Property Line	_____ ft.
	Distance from windows and doors	_____ ft.	Mech Air Intake	_____ ft.
	Distance of duct above adjoining grade at alley		16 ft.	_____ ft.

2. Exhaust terminations through non-fire rated exterior walls other exterior openings shall not be located within 3 feet of other exterior openings-Sec. 506.3.13.2.

I. Makeup air (508)

1. The amount of makeup air supplied to the building from all sources shall be approximately equal to the amount of exhaust air for all exhaust systems for the building.
   _____ **CFM / Type 1 Hood/Space** _____**CFM / Building/Space**
2. Makeup air system shall be electrically interlocked with the exhaust system, such that the makeup air system
   will operate when the exhaust system is in operation. Provide note _____.
   on plan sheet no.
3. Makeup air shall be provided by a mechanical or gravity means of sufficient capacity. Windows and door openings shall not be used for the purpose of providing makeup air.
4. Makeup air locations shall be per Sec 401.4 intake opening location.

FAN		MOTORIZED DAMPER	
Make and model	H.P.	Recommended air velocity, 500 fpm	
Static pressure	in. at cfm	Duct area req. = cfm/500 fpm	_____ /500= _____ ft.²
Duct Dimension	, area ft.²	Duct Dimension req. =	_____
Air velocity = cfm/area	_____ / _____ = _____ fpm	Eff. Damper opening	_____ X_____ = _____ ft.²

J. Slope of duct and cleanout access (506.3.7, 506.3.9)

1	Horizontal duct up to 75' long	Min slope ¼ in/ft	proposed	_____ in/ft
	More than 75' long	Min slope 1 in/ft	Proposed	_____ in/ft

2. Liquid/tight fitting cleanouts shall be constructed of steel of a not less gage than that required of the duct. Gasket or sealing shall be rated for not less than 1500 degrees.
   Horizontal cleanouts shall be located within 10 ft. from changes of direction which are greater than 45 degrees and not more than 20 ft. apart. Cleanouts shall be not less than 1 inch from edge of duct -shall be provided with internal damming to provide grease flow without pooling- be 12 inches X 12 inches, unless duct size precludes this size and be located on the bottom ONLY where other locations are not available.
3. Vertical grease duct cleanouts-see SBCC AMENDMENT Sec. 506.3.9-If the grease duct passes through a floor assembly there shall be a minimum of one (1) cleanout on each floor level

K. Duct enclosure (506.3.11, 506.3.11.3, 506.3.12)

1. Ducts penetrating a ceiling, wall or floor shall be enclosed in a duct enclosure having a fire rating of a minimum of 1 hour or if required by Type of construction, 2 hour.-SBCC AMENDMENT Sec. 506.3.11-from the point of penetration to the outside air.

2. A duct may only penetrate exterior walls where unprotected openings are permitted by Tbl. 705.8, 2012 IBC.

Type of Construction	Min. Fire-Resistive Const. Of Enclosure	Proposed	Proposed Material and Construction
I F.R., II F.R.	2 hour	_____ hr.	_____
II, III, IV, V	1 hour	_____ hr.	_____

3. Shaft enclosures: such grease duct systems and exhaust equipment shall have a clearance to combustible construction of not less than 18 inches and shall have a clearance to noncombustible construction of not less than 6 inches. Sec. 506.3.11. See exceptions for factory built exhaust equipment installed in accordance with Sec. 304.1. Proposed _____ Inches
4. Duct enclosures shall be sealed around the duct at the point of penetration and vented to the exterior through a weather-protected opening.
5. Where cleanout openings are located in ducts within a fire-rated enclosure, access openings shall be provided in the enclosure at each cleanout point. These openings shall have 1 or 2 hour fire rating, tight-fitting sliding or hinged doors with an approved sign as follows: **ACCESS PANEL. DO NOT OBSTRUCT-Sec 506.3.12.**

L. Separation of grease duct system (506.3.5)

A separate grease duct system shall be provided for each Type 1 Hood. A separate grease duct system is not required where all of the following conditions are met:

1. All interconnected hoods are located within the same story.
2. All interconnected hoods are located within the same room or in adjoining rooms.
3. Interconnecting ducts do not penetrate assemblies required to be fire-resistance rated.
4. The grease duct system does not serve solid fuel fired appliances.

1. Number of hoods vented by a single duct system: Proposed: _____
   A single duct system may serve more than one hood located in the same story of the building, provided that the interconnecting ducts do not penetrate any fire resistance rated construction and the grease duct system does not serve a solid fuel-fired appliance.
2. A hood outlet shall serve not more than a 12-foot section of hood.

M. Provide seismic restraint vertical support and attachment details. Shall be prepared by a structural engineer. (301.18 IMC; 1604 & 1613 IBC; & ASCE 7-10)

N. Additional information for Type 1 hood only (507):

1. Grease filters shall be installed at minimum 45 degree angle and
   Equipped with drip tray and gutter beneath lower edge of filters. (507.11.2) Proposed _____ Degrees
2. Distance between lowest edge of grease filters and cooking surface of:
   Exposed flames shall not be less than 2 feet. Without exposed flame shall not be less than .5 ft. (Table 507.11) Proposed _____ ft.
   Exposed charcoal, charbroil shall be not less than 3 ½ ft. (Table 507.11) Proposed _____ ft.
3. Type I hood and duct shall have clearances from construction of: Proposed _____ In.
   GWB on **metal stud** (minimum **3"** clearance required) (506.3.6, 507.9)
   GWB on **wood stud** (minimum **18"** clearance required)

UNPROTECTED (Combustible Construction)	PROTECTED (With 1-hour Fire-Rated Material & Metal Stud Construction)
Hood Min. Req. 18 in. Proposed _____ in.	Min. req. 3 in. Proposed _____ in.
Duct Min. Req. 18 in. Proposed _____ in.	Min. Req. 3 in. Proposed _____ in.

4. All joints and seams shall be made with continuous liquid-tight weld or braze made on the external surface of the duct system. Vibration insulation connector may be used provided it consists of noncombustible packing in a metal sleeve joint. (506.3.2, 506.3.2.4) Joints shall be smooth & accessible for inspection. (506.3.2)

5. Exhaust fans used for discharging grease exhaust shall be positioned so that the discharge will not impinge on the roof. The fan shall be provided with an adequate drain opening at the lowest point to permit drainage of grease to a suitable collection device. (506.5.2)

6. Fire Suppression System. Fire Suppression System shall be per Fire Code. Portable fire extinguisher shall also be provided per Fire Code. Provide automatic shutoff for make-up air, exhaust system and appliances when suppression system is activated. Dependant on suppression agent & manufacturer's requirements. (Sec 5.10.7)

7. Performance test certificate of the hood system shall be provided to owner before final approval. Test shall verify proper operation, the rate of exhaust, makeup air, capture and containment performance of the exhaust at normal operating conditions. (507.16)

References:
1) International Mechanical Code 2012
2) International Building Code 2012
3) International Fire Code 2012
4) International Fuel Gas Code 2012

Revised 10/08/2013

EXAMPLES

Example 1

Mechanical Plot Plan

1. Identification of adjacent streets, property and alleys.
2. Any easements that cross the property or other pertinent legal features.
3. Property line and property dimension.
4. Location, size and shape of any structure present on site and proposed for construction.
5. A North arrow and scale.
6. Locate and describe the job. Show location of hood, hood exhaust and supply, existing HVAC, and HVAC exhaust and supply.

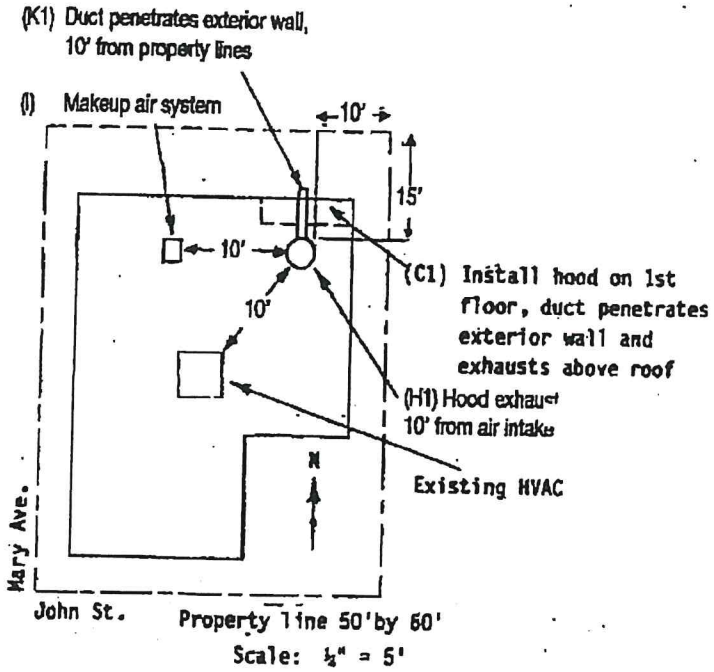

Example 2

Elevation View of Makeup Air System

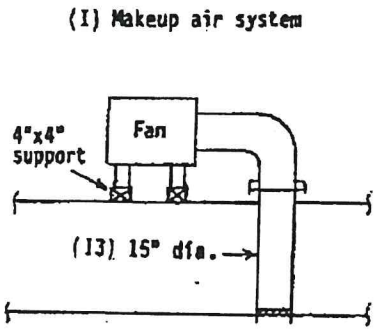

Plan View of Hood System

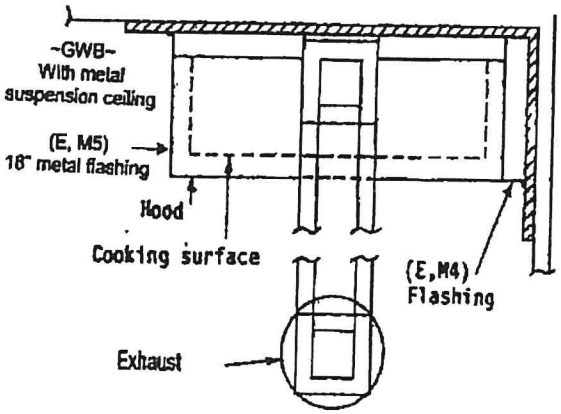

Example 3
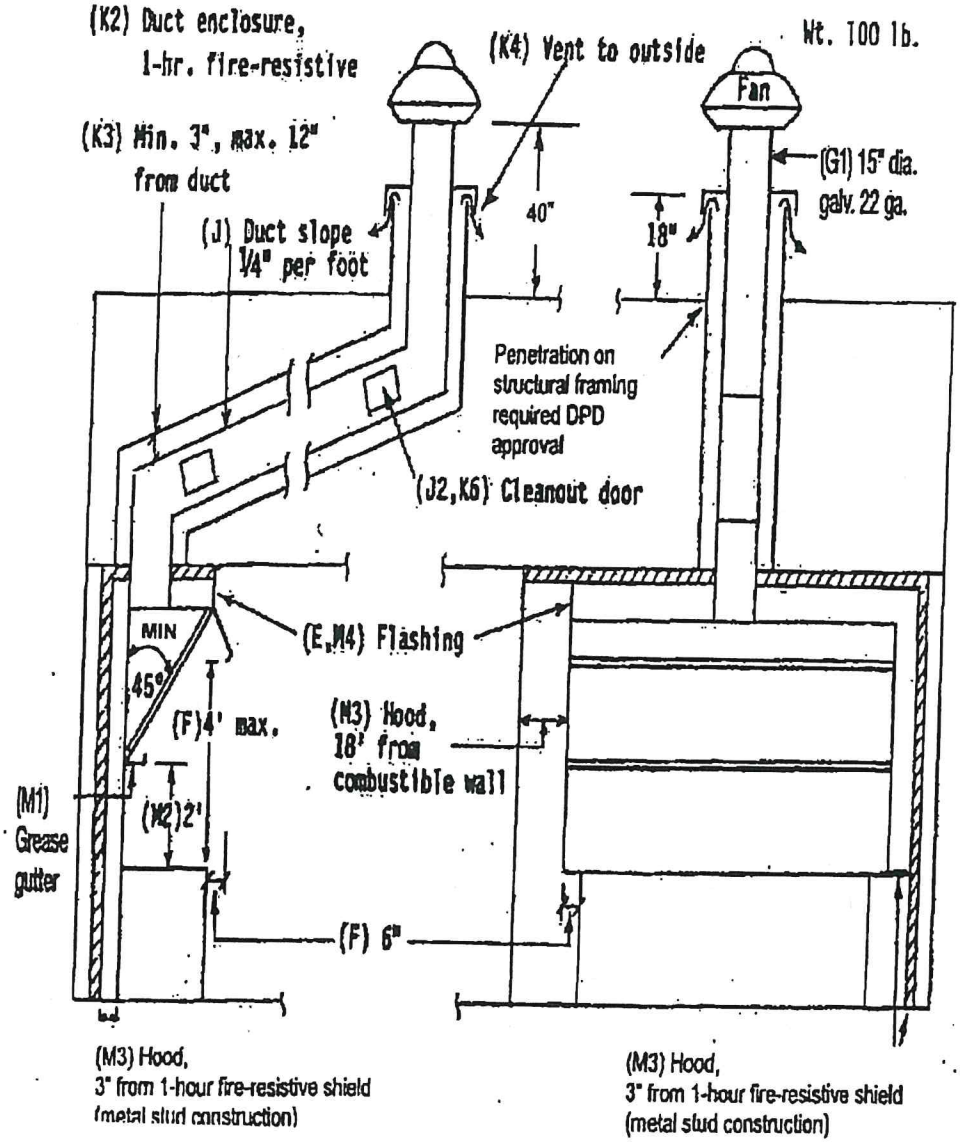
Elevation Views of Hood System