City of Rathdrum
PUBLIC WORKS DEPARTMENT
8047 W. Main Street #2
Rathdrum, ID 83858
www.rathdrum.org

Public Works Department
Building Department
208-687-2700 ex123

Planning & Zoning
208-687-2700 ex117
Fax 208-687-1377

PERMIT #_____ **RESIDENTIAL**

JOB ADDRESS: _____

LOT: _____ BLK: _____ SUBDIVISION: _____

CONTRACTOR/OWNER: _____

ADDRESS: _____

CONTACT: _____ PHONE: _____

ARCHITECT: _____ PHONE: _____

ENGINEER: _____ PHONE: _____

PLEASE CHECK CATEGORIES:

___ NEW CONSTRUCTION
___COMMERCIAL/INDUSTRIAL
___BUILDING USE _____
___MOBILE HOME SET
___SIGN
___OTHER _____

___ALTERATION/ADDITION
___RESIDENTIAL
___SINGLE FAMILY
___DUPLEX
___MULTI-FAMILY
___RE-ROOF

CONSTRUCTION COST (estimate or actual): _____

HEAT SOURCE: ___GAS ___ELECTRIC

POINTS OF CONNECTION:
SEWER LOCATION:_____ Stubbed to lot ___YES ___NO
WATER LOCATION: _____ Stubbed to lot ___YES ___NO

SIGNATURE: _____

NAME (Print): _____

THIS APPLICATION DOES NOT AUTHORIZE ANY TYPE OF WORK TO COMMENCE. A BUILDING PERMIT WILL BE ISSUED AFTER REVIEW OF THIS APPLICATION AND NECESSARY PLANS FOR BUILDING, MECHANICAL, PUBLIC WORKS, AND ZONING CODE COMPLIANCE.

BUILDING DEPT APPROVAL: _____

PUBLIC WORKS APPROVAL:_____

CITY OF RATHDRUM
BUILDING PERMIT APPLICATION PROCEDURE

This page was designed to help the applicant with the permit procedure.
The following items are needed to apply for a building permit.

▶Completed application forms.
▶TWO complete set of construction plans for residential, three sets of plans for commercial or industrial, drawn to scale showing the following:

- Elevations on all sides
- Floor plans of all floor levels, showing electrical, window sizes, door sizes, location of smoke detectors
- Show location of furnace and hot water heater
- Footing and foundation details (engineering required for foundation walls over eight(8) feet high and retaining walls over four(4) feet high)
- Complete framing details (showing all structural and nonstructural components)
- Roof details – truss specifications
- Deck details
- Dimensions clearly marked on the plans and drawn to scale

**Plans for commercial, industrial, public, pole buildings, or log buildings must be stamped by an Idaho licensed architect or engineer. (Sites exceeding 15% slope may require additional engineering.

NOTE:
ONE SET OF THE APPROVED PLANS WILL BE STAMPED BY THE BUILDING DEPARTMENT, AND MUST REMAIN ON THE JOB SITE AT ALL TIMES WITH ENGINEERED TRUSS SHEETS AS NEEDED.

FILLING OUT THE APPLICATIONS AND SITE PLAN REQUIREMENTS:

- Make sure all spaces are completed.
- Sign all forms
- Site Plan:
  Residential, single family and duplex; two copies of site plan required
  Commercial and industrial; four copies of site plan required
  All site plans must be drawn to scale and show access to property with any easements

RETURN THE APPLICATION:

Bring completed application, along with the required enclosures as listed above to our office. (Incomplete applications will *not* be accepted)
After submitting the application, you may be required to obtain signatures from other agencies.
Your application will be reviewed for compliance with local and state codes.
(Corrections may need to be completed prior to final approval)

BUILDING PERMIT# _____

CITY OF RATHDRUM
UTILITY DEPARTMENT BILLING SECTION

THIS NOTICE IS TO INFORM YOU THAT YOU WILL BE REQUIRED TO PAY FOR ANY WATER/SEWER USAGE DURING CONSTRUCTION. IF YOU SELL THE PROPERTY, YOU MUST INFORM THE BUYER OF THE NEED TO CONTACT CITY HALL TO CHANGE THE BILLING ACCOUNT TO THEIR NAME. IF THE BUYER DOES NOT DO THIS, YOU WILL CONTINUE TO BE BILLED FOR WATER/SEWER USAGE FOR THE PROPERTY.

OCCUPANCY OF THE PREMISES PRIOR TO ISSUANCE OF A CERTIFICATE OF OCCUPANCY WILL RESULT IN DISCONNECTION OF WATER SERVICE UNTIL A CERTIFICATE IS ISSUED.

I UNDERSTAND AND AGREE TO THE ABOVE

_____
SIGNATURE

_____
PRINTED NAME

_____
MAILING ADDRESS

_____
PHONE NUMBER (S)

CITY OF RATHDRUM
PERFORMANCE BOND AGREEMENT

PERMIT # _____

BUILDERS NAME: _____

DBA: _____

ADDRESS: _____

PHONE # _____

I DO UNDERSTAND THAT THE PUBLIC WORKS DEPARTMENT HAS BEEN EMPOWERED BY THE CITY COUNCIL THROUGH ORDINANCE #345 TO WITHHOLD THE CERTIFICATE OF OCCUPANCY ON THE ABOVE REFERENCED BUILDING PERMIT UNTIL ALL AREAS OF THE BUILDING SITE AND/OR RIGHT OF WAY INSTALLATIONS OR IMPROVEMENTS ARE IN COMPLIANCE WITH ALL STANDARDS AND REQUIREMENTS OF THE CITY OF RATHDRUM.

IN ACCORDANCE WITH ORDINANCE #345, IF ALL STANDARDS AND REQUIREMENTS HAVE NOT BEEN MET, I WILL BE REQUIRED TO POST A MINIMUM OF A $2,000.00 PERFORMANCE BOND TO THE PUBLIC WORKS DEPARTMENT. (AMOUNTS OVER $2,000.00 TO BE DETERMINED BY THE PUBLIC WORKS DIRECTOR.) UPON PAYMENT OF THE PERFORMANCE BOND, THE CERTIFICATE OF OCCUPANCY WILL BE RELEASED BY THE PUBLIC WORKS DEPARTMENT.

REFUND OF THE PERFORMANCE BOND SHALL BE MADE AFTER BUILDING SITE AND RIGHT OF WAY INSTALLATIONS AND/OR IMPROVEMENTS HAVE BEEN BROUGHT INTO COMPLIANCE WITH ALL STANDARDS AND REQUIREMENTS OF THE CITY OF RATHDRUM, AS DETERMINED BY THE PUBLIC WORKS DIRECTOR.

AFTER THE INITIAL INSPECTION, EACH RE-INSPECTION REQUIRED SHALL BE DEDUCTED FROM THE PERFORMANCE BOND REFUND AT THE RATE OF $85.00 PER INSPECTION.

IF ALL REQUIREMENTS AND STANDARDS HAVE NOT BEEN MET WITHIN THIRTY (30) DAYS AFTER THE PERFORMANCE BOND HAS BEEN POSTED, THE PERFORMANCE BOND SHALL BE FORFEITED TO THE CITY OF RATHDRUM. (IN THE EVENT OF ADVERSE WEATHER CONDITIONS, WHICH PREVENT INSPECTION OR REPAIRS, THE PUBLIC WORKS DIRECTOR MAY EXTEND THE THIRTY DAY FORFEITURE REQUIREMENT.)

I DO UNDERSTAND AND AGREE TO ABIDE BY THE ABOVE REQUIREMENTS

BUILDERS SIGNATURE: _____
DATE: _____

City of Rathdrum
Public Works Department
8047 W. Main Street #2
Rathdrum, ID 83858

Building Department
Public Works Department
Phone: (208) 687-2700 x 24
Fax: (208) 687-1377

MECHANICAL PERMIT APPLICATION

PERMIT #_____ DATE RECEIVED:_____

JOB SITE STREET ADDRESS: _____
LOT:_____BLK:_____SUBDIVISION:_____
PARCEL #_____

CONTRACTOR:_____ LICENSE #_____
ADDRESS: _____ CITY:_____ ST:___ZIP:_____
CONTACT NAME:_____ PHONE #_____

OWNER NAME:_____ PHONE #_____
ADDRESS: _____ CITY:_____ ST:___ZIP:_____

CONSTRUCTION COST (ESTIMATE OR ACTUAL) $_____

TYPE OF WORK TO BE DONE:
_____
_____

UTILITY TYPE: (circle one) GAS ELECTRIC BOTH

PERMIT TYPE:

_____Commercial/Industrial	__New	__ Added
_____Residential	__New	__ Added
_____Manufactured Home	__New	__ Added
_____Other Mechanical Installation	__New	__ Added

SIGNATURE OF APPLICANT:_____ DATE_____

THIS APPLICATION DOES NOT AUTHORIZE ANY TYPE OF WORK TO COMMENCE. A BUILDING PERMIT will be issued after review of this application and necessary plans for building, mechanical, public works, and zoning code compliance.

BUILDING DEPARTMENT APPROVAL:_____ DATE _____

COMMENTS: _____

PUBLIC WORKS APPROVAL: _____ DATE _____

COMMENTS: _____

RESIDENTIAL HVAC SYSTEM DESIGN FORM

Agency Use Only:
MECHANICAL PERMIT NUMBER: _____
BUILDING PERMIT NUMBER: _____

Please COMPLETE "ALL" Fields Below
(For Dwellings Permitted after 01-01-2010)

DESIGNATED CONTACT PERSON

Name: _____
Phone: _____ Cell: _____
E-mail: _____

Mechanical Contractor: _____
License Number: _____
Phone Number: _____ E-mail: _____
Job Address: _____

REQUIRED ATTACHMENTS		ATTACHED
1. Manufacturer's Performance Data Sheets	Yes	☐
2. Manual D Worksheets	Yes	☐
3. Duct Distribution Line Drawing	Yes	☐
4. Choose one (1) of the following:		
a) Manual J1 Form & Worksheets	Yes	☐
-OR-		
b) MJ1AE Form & Worksheets*	Yes	☐
-OR-		
c) Other Approved Form & Worksheets	Yes	☐

HVAC LOAD CALCULATIONS (from worksheet; Per 2009 IRC M1401.3)

Design Conditions:

Winter Design Conditions:
Outdoor Temperature _____
Indoor Temperature _____
Total Heat Loss _____ btu

Summer Design Conditions:
Outdoor Temperature _____
Indoor Temperature _____
Latent Heat Gain _____ btu
Total Heat Gain _____ btu

Building Construction Information:

Building:
Number of Bedrooms _____
Conditioned Floor Area _____ sq ft
Number of Occupants _____ bedrooms + 1

Windows:
Eave Overhang Depth _____ ft
U – Factor _____

 # Skylights: _____

Direction Orientation of Front Door: _____

HVAC EQUIPMENT SELECTION (Per 2006 IRC M1401.3)

Heating Equipment Data:
Equipment Type _____
Manufacturer _____
Model Number _____
Heating Capacity _____

Cooling Equipment Data:
Equipment Type _____
Manufacturer _____
Model Number _____
Total Cooling Capacity _____

Blower Data:
Heating cfm _____
Cooling cfm _____
Static Pressure _____

HVAC DUCT DISTRIBUTION DESIGN (Per 2006 IRC M1601.1)

Design Airflow _____
External Static Pressure _____
Component Pressure Losses _____
Available Static Pressure _____

Longest Supply Run _____
Longest Return Run _____
Total Effective Length _____
Friction Rate _____

Trunk Type (circle 1) Branch Type (circle 1):
duct board, ☐ flex, ☐ duct board, ☐ flex, ☐
sheet metal, ☐ other: ☐ sheet metal, ☐ other: ☐
_____ _____

(Available Static Pressure = ESP-CPL) (Friction Rate = ASP x 100 / TEL)

The load calculations, equipment selection, and duct system design were performed based on the plans as submitted for a Building Permit. The equipment and duct design as approved will be installed in the field.

CONTRACTOR (Please Print) _____

Contractor Signature: _____ Date _____

* If Home qualifies for MJ1AE form base on Abridged Edition Checklist

BUILDING PERMIT#_____

CITY OF RATHDRUM
APPLICATION/PERMIT FOR SEWER SERVICE

RESOLUTION #109

THIS PERMIT IS REQUIRED FOR ALL NEW SEWER SERVICE LINES OR ANY REPLACEMENT OF SEWER SERVICE LINES.

THIS APPLICATION MUST BE COMPLETED AND RETURNED TO THE PUBLIC WORKS DEPARTMENT BEFORE THE WORK IS DONE. THE PROPER INSPECTION FEE MUST ACCOMPANY THIS APPLICATION. INSPECTION BY CITY PERSONNEL IS REQUIRED, PRIOR TO BACKFILL. SEWER SERVICE LINE FEES ARE AS FOLLOWS:

$89.00 EACH INSPECTION OF NEW SEWER LATERAL INSTALLED ON A PUBLIC SEWER MAIN.

PROPERTY OWNER: _____

MAILING ADDRESS: _____

_____

PHONE NUMBER: _____

LOCATION OF PROPERTY _____

_____

FAILURE TO OBTAIN PERMIT AND PAY REQUIRED FEE PRIOR TO WORK BEING COMMENCED WILL, AT THE DISCRETION OF THE DEPARTMENT, RESULT IN THE ASSESSMENT OF A DOUBLE FEE.

INSTALLATION MUST BE INSPECTED PRIOR TO BACKFILL. IF COVERED WITHOUT INSPECTION, INSPECTOR MAY REQUIRE INSTALLATION TO BE UNCOVERED FOR INSPECTION.

MAKE CHECK OR MONEY ORDER PAYABLE TO THE CITY OF RATHDRUM AND BRING TO THE PUBLIC WORKS DEPARTMENT AT 8047 W. MAIN STREET, LOWER LEVEL. PHONE NUMBER: 687-2700

FOR THE OWNER: I AGREE TO PERMIT INSPECTIONS OF THIS INSTALLATION BY AN INSPECTOR FROM THE CITY OF RATHDRUM.

_____

SIGNATURE OF PROPERTY OWNER

DATE:_____

BUILDING PERMIT#_____

CITY OF RATHDRUM PUBLIC WORKS DEPARTMENT
RIGHT-OF-WAY ENCROACHMENT INSPECTION REPORT

_____
DATE ISSUED

_____
PROPERTY OWNER

_____
JOB ADDRESS

_____
PHONE NUMBER

REQUIRED FEES

ADMINISTRATION: _____
SIDEWALK, CURB, APPROACH: _____
SEWER INSPECTION: _____
WATER INSPECTION: _____
STORMWATER INSPECTION: _____

TOTAL FEES: _____

SCOPE OF WORK: _____
_____
_____

NOTICE: This permit becomes null and void if work or construction authorized is not commenced and completed within 180 working days. All provisions of laws and ordinances governing this type of work will be complied with whether specified herein or not. The granting of a permit does not presume to give authority to violate or cancel the provisions of any state or local law regulating construction or the performance of construction. REQUIRED INSPECTIONS MUST BE MADE. INSPECTORS MUST BE NOTIFIED AT LEAST TWENTY-FOUR (24) HOURS IN ADVANCE. The applicant hereby agrees that the responsibility of the City to inspect the work and work site does not relieve the permittee of the duty to keep the site safe at all times and to perform work in a manner required by city ordinances and other applicable laws. Applicant/permittee hereby covenants to protect the City and save the City harmless from all claims, actions or damages of every kind from all claims, actions or damages of every kind and description which may accrue to or be suffered by any person or persons, corporations, or property be reason of the performance of any work done under this permit, character of materials used, or manner of installation, maintenance and operation or by the improper occupancy of right-of way or public place or public structure and in case any suit or action is brought against said City for damages arising out of, or by reason of any of the work or construction done under this permit, the applicant/permittee, it's successors or assigns will, upon notice to it of commencement of such action, defend the same at applicant/permittee's sole cost and expense and will satisfy any judgment after said permit or action shall have been finally determined, if adverse to the City. Any damage or deficiency to the site or within the right-of-way becomes the responsibility of the permittee unless the Public Work Inspector is notified of such damages prior to issuance of this permit. All improvements within the right-of-way shall be warranted by the permittee for a period of one year.

I DO UNDERSTAND AND AGREE TO ABIDE BY THE ABOVE REQUIREMENTS.

_____ _____
SIGNATURE ISSUED BY

_____Applicant has been given standard drawings for the work to be done

Zone 14
MECcheck Prescriptive Package for Idaho
2009 IECC

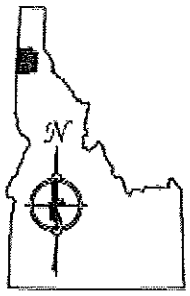

COMPLIANCE STATEMENT:
The proposed building design is consistent with the building plans, specifications, and other calculation submitted with the permit application. The proposed building has been designed to meet the 2009 IECC requirements.

PERMIT NUMBER: _____

BUILDER: _____

ADDRESS: _____

SIGNATURE: _____

CITY OF RATHDRUM, KOOTENAI COUNTY IDAHO

MECcheck™

3 simple ways to demonstrate compliance with the MEC or the IECC.

1. **Prescriptive approach** - allows builders or designers to select from various combinations of energy conservation measures based on "climate zone" location. Maps and prescriptive packages can be downloaded at **www.energycodes.gov/meccheck/packages_iecc.shtml**
2. **Trade-off worksheet approach** - enables builders to vary insulation levels in the ceiling, wall, floor, basement wall, slab-edge and crawl space; glazing and door areas; and glazing and door U-values.
3. **Software approach** – completes the same calculations as the trade-off worksheet but automates the procedure using Windows-based software.

FREE MECcheck Downloads: www.energycodes.gov

Air Leakage

All penetrations to the building envelope must be sealed, caulked, gasketed, weatherstripped or otherwise sealed. This includes, but is not limited to, areas around windows, doors, HVAC ductwork, plumbing pipe, electrical penetrations, etc. Recessed lights must meet one of the following conditions:

- **Type IC** rated with no penetrations between the inside of the fixture and ceiling cavity.
- **Type IC or non-IC** rated and installed in a sealed box constructed from 1/2" gypsum wallboard or other approved assembly.
- **Type IC** rated, tested and labeled as to being "airtight".

Vapor Retarders

Vapor retarders (with a maximum perm rating of 1.0) must be installed on the "warm-in-winter" side of all non-vented framed ceilings, walls and floors. Typical methods used are: Kraft-faced insulation, polyethylene sheeting and vapor retarder primers/paints.

Service Water Heating

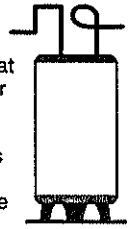

Water heaters with pipe risers shall have heat traps on both the inlet and outlet of the water heater unless the water heater has integral heat traps or is part of a circulating system. Typical methods used for creating heat traps are "U" or "rams horn" bends in the flexible pipe connectors or installing aftermarket pipe nipples with integral traps.

Duct Insulation

Supply and return-air ducts located within crawlspaces, uninsulated basements, attics and framed wall cavities must be insulated to R-6.5. Ductwork located on the exterior of the building must be insulated to R-8.

Duct Construction

All joints, seams and connections must be securely fastened and sealed with welds, gaskets, mastics (adhesives), mastic-plus-embedded fabric or approved tapes. Standard duct tape is not permitted.

Temperature Controls

Thermostats must be capable of being set down to 55°F or lower for heating and up to 85°F or more for cooling. Thermostats for both heating and cooling must have a deadband (temperature range where no heating or cooling takes place) of at least 5°F. Heat pumps require a thermostat capable of preventing back-up heat from operating when the heating requirements can be met by the heat pump alone.

Swimming Pools

All heated pools must have an "on/off" pool heater switch and be equipped with a pool cover. All swimming pool pumps must be equipped with time clocks.

For information and technical assistance

Ingo Stroup
(208) 332-7153
istroup@dbs.state.id.us

Ron Oltman
(208) 334-4056
roltman@dbs.state.id.us

MECcheck™

Counties: Benewah, Cassia, Jerome, Kootenai, Latah, Shoshone, and Twin Falls

Zone 14 MECcheck™ Prescriptive Package for Idaho

CODES & STANDARDS

ZONE 14

Single-Family Prescriptive Packages

1998/2000 IECC

Step by Step Instructions

Step 1: Determine the glazing area %.

Step 2: Select a package with equal or less glazing %. Each component requirement must be met within the selected package, otherwise select another package or use the **MEC*check***™ software, which can calculate trade-offs for compliance.

Step 3: Complete the Prescriptive Package Worksheet available online at **www.energycodes.gov/meccheck/prescritive.shtml.**

Package	MAXIMUM		MINIMUM						Heating/Cooling Equipment Efficiency[9]
	Glazing Area %[1]	Glazing U-Factor[2]	Ceiling R-Value[3]	Wall R-Value[4]	Floor R-Value[5]	Basement Wall R-Value[6]	Slab Perimeter R-Value[7]	Crawl Space Wall R-Value[8]	
1	8%	0.43	R-38	R-16	R-19	R-10	R-7	R-16	Normal
2	12%	0.45	R-49	R-19	R-26	R-13	—	—	Normal
3	12%	0.40	R-49	R-21	R-19	R-10	R-7	R-17	Normal
4	12%	0.35	R-38	R-19	R-19	R-10	R-7	R-17	Normal
5	15%	0.35	R-49	R-21	R-21	R-11	R-11	R-20	Normal
6	18%	0.33	R-49	R-22	R-25	R-11	R-14	R-19	Normal
7	20%	0.30	R-49	R-26	R-21	R-11	R-10	R-17	Normal
8	22%	0.30	R-49	R-22	R-30	R-14	—	—	Normal
9	25%	0.25	R-49	R-19	R-30	R-14	—	—	Normal
10	12%	0.65	R-38	R-18	R-19	R-9	R-4	R-22	High Heating
11	12%	0.50	R-38	R-13	R-19	R-9	R-4	R-22	High Heating
12	15%	0.55	R-38	R-18	R-21	R-10	R-5	R-28	High Heating
13	15%	0.45	R-49	R-13	R-21	R-10	R-5	R-24	High Heating
14	18%	0.45	R-38	R-18	R-19	R-9	R-4	R-22	High Heating
15	18%	0.40	R-38	R-13	R-26	R-11	R-9	—	High Heating
16	22%	0.40	R-49	R-19	R-19	R-9	R-4	R-22	High Heating
17	22%	0.35	R-49	R-15	R-21	R-10	R-5	R-26	High Heating
18	12%	0.60	R-38	R-18	R-15	R-8	R-2	R-14	High Heat/Cool
19	12%	0.50	R-38	R-13	R-19	R-9	R-3	R-19	High Heat/Cool
20	15%	0.55	R-38	R-17	R-21	R-10	R-5	R-28	High Heat/Cool
21	15%	0.45	R-38	R-13	R-21	R-10	R-5	R-28	High Heat/Cool
22	18%	0.50	R-49	R-16	R-26	R-11	R-8	—	High Heat/Cool
23	18%	0.40	R-49	R-13	R-21	R-10	R-5	R-26	High Heat/Cool
24	22%	0.40	R-38	R-18	R-21	R-10	R-5	R-28	High Heat/Cool
25	22%	0.35	R-38	R-13	R-26	R-11	R-9	—	High Heat/Cool

Footnotes

1. **Glazing Area** is the ratio of the area of the glazing assemblies (including sliding-glass doors, skylights, and basement windows but excluding opaque doors) to the gross wall area, expressed as a percentage. Up to 1% of the total allowed glazing area may be excluded from the U-value requirement. For example, 3 ft² of decorative glass may be excluded from a building design with 300 ft² of glazing area.
2. **Glazing U-Factors** must be tested and documented by the manufacturer in accordance with the National Fenestration Rating Council (NFRC) test procedure or taken from the glazing U-factor table in Appendix B of the Prescriptive Packages User's Guide located at **www.energycodes.gov.** Center-of-glass U-factors cannot be used.
3. The **Ceiling R-values** do not assume a raised or oversized truss construction. If the insulation achieves the full insulation thickness over the plate lines of exterior walls, R-30 insulation may be substituted for R-38 insulation. Ceiling R-values represent the sum of cavity insulation plus insulating sheathing (if used). For ventilated ceilings, insulating sheathing must be placed between the conditioned space and the ventilated portion of the roof.
4. **Wall R-Values** represent the sum of the wall cavity insulation plus insulating sheathing (if used). Do not include R-values for air films, exterior siding, "housewraps", structural sheathing, or interior drywall. For example, an R-19 requirement could be met EITHER by R-19 cavity insulation OR R-13 cavity insulation plus R-6 insulating sheathing. Wall requirements apply to wood-frame wall constructions. Metal-frame wall or mass (concrete, masonry, log) wall equivalent R-values can be found in the Prescriptive Packages User's Guide located at **www.energycodes.gov.**
5. The **Floor R-Value** requirements apply to floors over unconditioned spaces (such as unconditioned crawlspaces, basements, or garages). Floors over outside air (such as cantilevers, bay windows, etc.) must meet the ceiling requirements.
6. **Basement Wall R-Values** apply to walls of conditioned basements below uninsulated floors and must be insulated from the top of the basement wall to a depth of 10 ft below grade or to the level of the basement floor, whichever is less. The entire opaque portion of any individual basement wall with an average depth less than 50% below grade must meet the same R-value requirement as above-grade walls. Windows and sliding glass doors of conditioned basements must be included with the other glazing.
7. The **Slab Perimeter R-Value** requirements are for unheated slabs. Add an additional R-2 for heated slabs, except in Zone 1 which does not require slab insulation. For packages with a slab insulation requirement, the insulation must extend a total linear distance of at least 48 in. in Zones 13-15. The insulation must extend: 1) down from the top of the slab, or 2) down from the top of the slab to the bottom of the slab and then horizontally underneath the slab, or 3) down from the top of the slab to the bottom of the slab and then horizontally away from the slab, with pavement or at least 10 in. of soil covering the horizontal insulation. Exterior exposed insulation shall be protected.
8. The **Crawl Space Wall R-Value** requirements are for walls of unventilated crawl spaces. The crawl space wall insulation must extend from the top of the wall (including the rim joist and sill plate) to at least 12 in. below the outside finished grade. If the distance from the outside finished grade to the top of the footing is less than 12 in., the insulation must extend a total vertical plus horizontal distance of 24 in. from the outside finished grade.
9. **High Heating** means a furnace AFUE of 90% or more, or a heat pump HSPF of 7.8 or more. **High Cooling** means a SEER of 12 or more. **High Heat/Cool** means both heating and cooling equipment must meet these minimum efficiencies. If you plan to install more than one piece of heating equipment or more than one piece of cooling equipment, the equipment with the lowest efficiency must meet or exceed the efficiency required by the selected package.

Notes:
The maximum Door U-factor is 0.35. One door may be excluded from this requirement. If a door contains glass and an aggregate U-factor is not available, include the glass area with your glazing and use the non-glazed door U-factor table in Appendix B of the Prescriptive Packages User's Guide located at **www.energycodes.gov.**

SITE PLAN

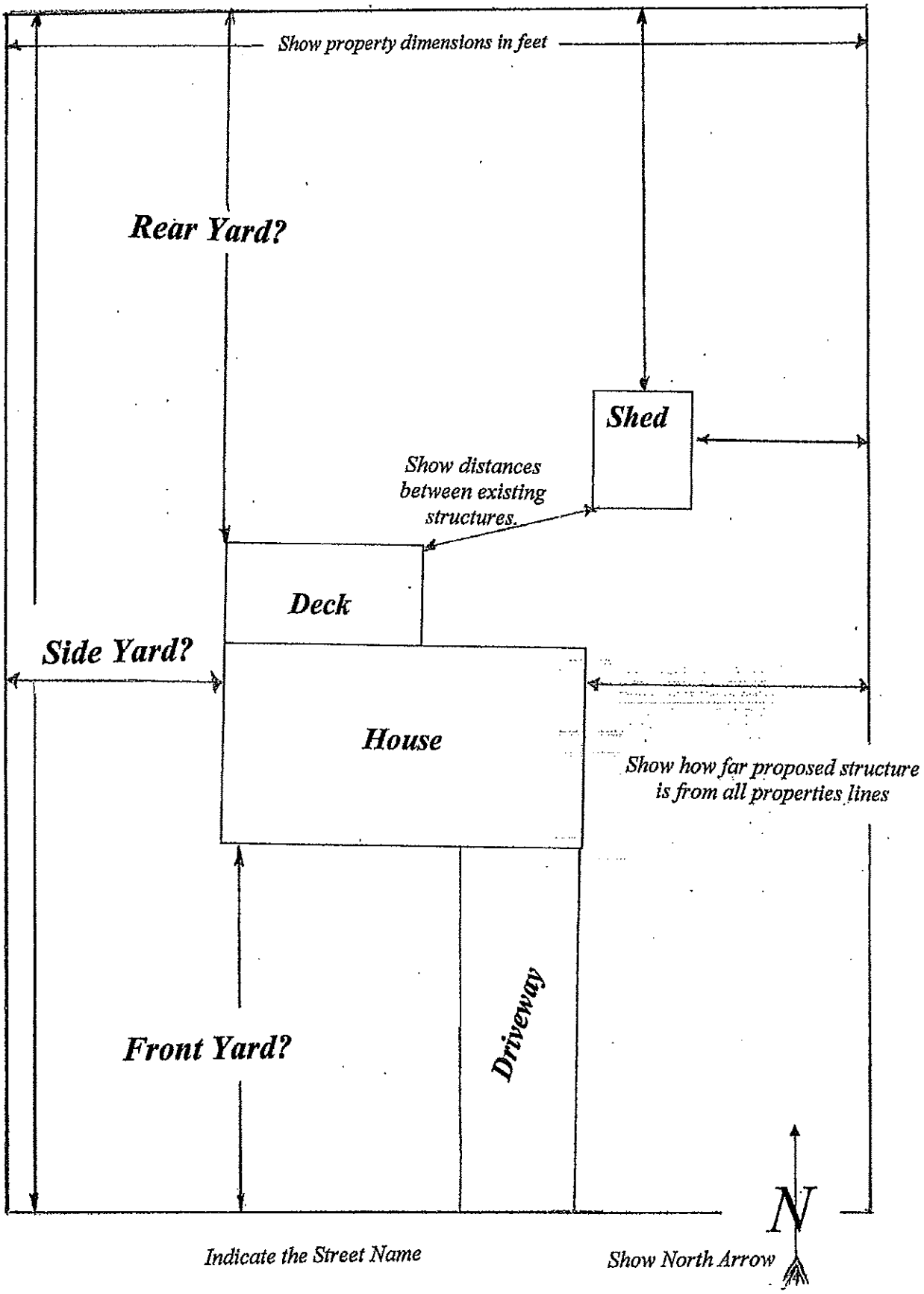
Show property dimensions in feet
Rear Yard?
Shed
Show distances between existing structures.
Deck
Side Yard?
House
Show how far proposed structure is from all properties lines
Driveway
Front Yard?
N
Indicate the Street Name
Show North Arrow

ATTENTION BUILDING CONTRACTORS

BEFORE CALLING OUR OFFICE FOR YOUR FINAL INSPECTION, WE ARE REQUIRING THAT ALL OTHER INSPECTIONS BE SIGNED OFF – SUCH AS THE PLUMBING AND ELECTRICAL. ONCE THESE ARE COMPLETED AND THE JOB CARD IS COMPLETE, WE WILL GLADLY PRINT YOUR CERTIFICATE OF OCCUPANCY IN A TIMELY FASHION. ALL CONCRETE SIDEWALKS, APPROACHES, DRIVEWAY, ETC NEED TO COMPLY WITH CITY STANDARDS.

BY SIGNING THIS NOTICE, YOU ACKNOWLEDGE THAT YOU ARE AWARE OF THE CITY OF RATHDRUM REQUIREMENTS.

CALLING FOR A FINAL INSPECTION BEFORE YOU ARE READY COULD RESULT IN A $89.00 REINSPECTION FEE

_____ _____

CONTRACTOR/AGENT *DATE*

THANK YOU FOR YOUR CONSIDERATION

BUILDING OFFICIAL

11-15-3: RESIDENTIAL LANDSCAPING:

A. Intent: It is the intent of this section to protect and preserve the appearance, character and value of surrounding neighborhoods. Residential development that complements the visual character of the landscape and does not cause visual deterioration or destruction is an asset to any community.

B. Minimum Residential Landscaping Requirements:

1. Lawn Grass Seed And Sod: All lots shall have the front and side yards which have street frontage seeded from the roadside edge of the unpaved right of way. Sod may be used to comply with any requirement of seeding set forth herein.

2. Landscaping Tree Requirements: One tree shall be planted for each public street frontage of each single-family lot in any residential district with the exception of manufactured home parks which will be required to provide a minimum of one tree on every other lot within the park. One tree shall be planted for each dwelling unit's public street frontage for duplex lots. Trees may be planted in grassy swale areas only when they do not interfere with the drainage function of the swale.

Required landscape trees shall be trees selected from the landscape standards manual adopted by the city council and shall have a minimum size at time of planting as follows:

Type	Minimum Plant Size
Deciduous trees	2 inches minimum caliper
Multistemmed trees	6 feet minimum height
Evergreen trees	6 feet minimum height

Existing trees on a site should be retained to the maximum extent possible. Credit may be given for incorporating existing trees into the landscaping design if it meets the intent of this section.

3. Certificate Of Occupancy: No certificate of occupancy shall be issued until respreading of soil and seeding of lawn and planting of required trees has been completed, except the city may authorize a delay in the completion of planting, provided an appropriate guarantee in the form of a one thousand dollar ($1,000.00) bond is in place. If the required landscaping is not completed within one year of

BUILDING / PUBLIC WORKS - STANDARDS

- - - - - - - - - - - - -

RATHDRUM BUILDING DEPARTMENT

NOTICE

EFFECTIVE IMMEDIATELY, THE OWNER/CONTRACTOR WILL BE RESPONSIBLE FOR THE JOB CARD, ENGINEERED TRUSS SHEETS, AND THE STAMPED SET OF PLANS. THESE MUST BE MADE AVAILABLE TO THE INSPECTOR AT THE BUILDING SITE ON THE REQUESTED DATE AND TIME OF INSPECTION.

IF SUCH WORK, FOR WHICH THE INSPECTION WAS CALLED, IS NOT READY OR IF THE PLANS AND JOB CARD ARE NOT AVAILABLE ON SITE TO THE INSPECTOR, A REINSPECTION FEE MAY BE ASSESSED.

REQUIRED INSPECTIONS:

1. FOOTINGS
2. STEMWALL OR SLAB
3. FRAMING
4. INSULATION - per International Energy Conservation Code
5. SHEETROCK
6. FINAL

- - - - - - - - - - - - -

RATHDRUM PUBLIC WORKS DEPARTMENT

NOTICE

REQUIRED INSPECTIONS:

1. WATER & SEWER LINE (prior to backfill)
2. CONCRETE FORMS (prior to pour) for driveway, sidewalk, and approach.
3. FINAL

TO SCHEDULE INSPECTION FOR EITHER OF THE ABOVE, YOU WILL NEED YOUR BUILDING PERMIT NUMBER. 24 HOURS NOTICE REQUIRED.

GARAGES ARE NOW REQUIRED IN RATHDRUM

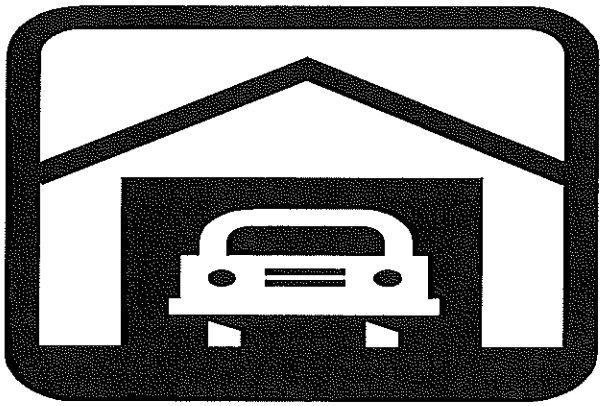

ALL NEW SINGLE FAMILY RESIDENTIAL STRUCTURES AND DUPLEXES SHALL HAVE A GARAGE CONSTRUCTED OF THE SAME TYPE MATERIAL AS THE DWELLING STRUCTURE. IF THE DWELLING UNIT HAS TWO OR MORE BEDROOMS, THE MINIMUM GARAGE SIZE SHALL BE A TWO-CAR GARAGE.

EXCEPTION: LOTS PLATTED PRIOR TO 1945 MAY SEEK AN ADMINISTRATIVE RELIEF FROM THE PLANNING ADMINISTRATOR FROM THE GARAGE REQUIREMENT.

ORDINANCE #449

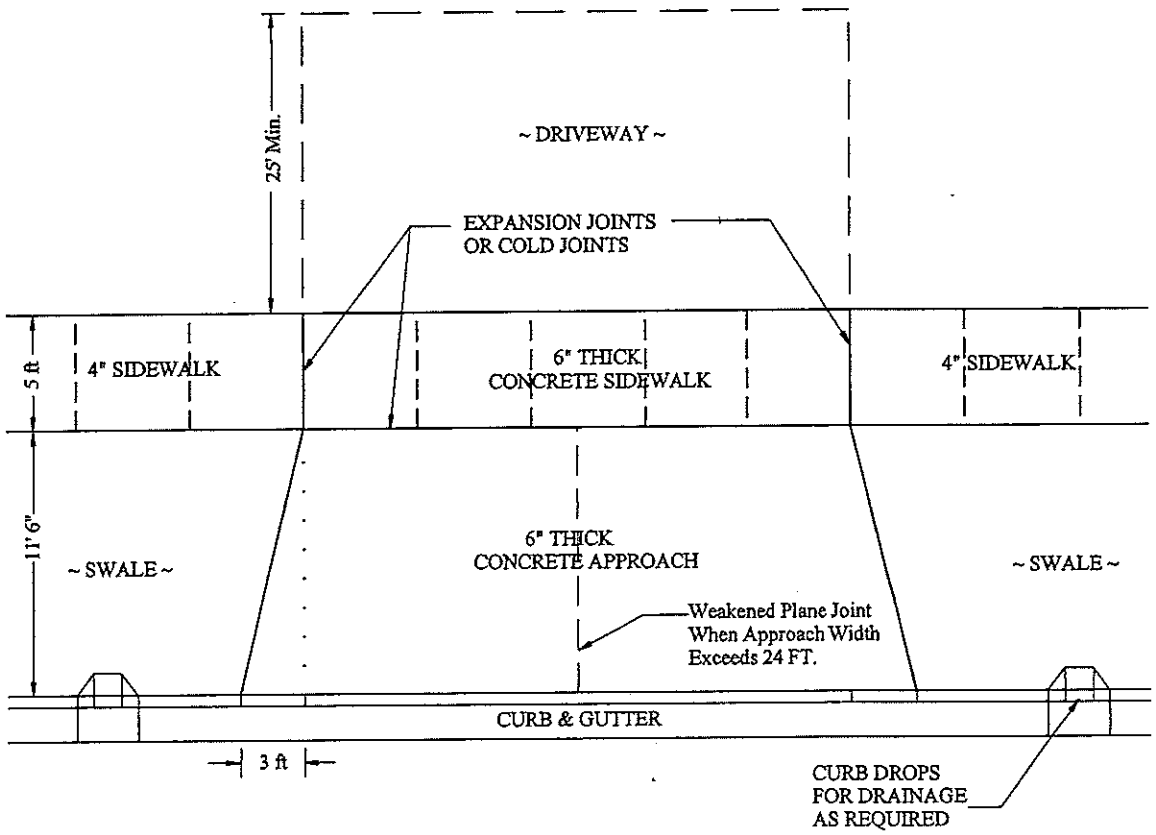

Plan

DRIVEWAY APPROACH

No Scale

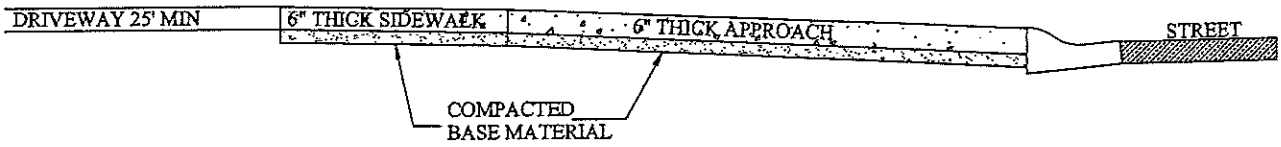

Profile

No Scale

NOTES:

1. Minimum Residential Approach Width 16 ft.
2. Curb Drops may be required both sides of approach for provision of additional street drainage.
3. All curb replacement must be inspected prior to pouring concrete.
4. Cold joints required in sidewalk at 5' intervals with Expansion joints required at 20' intervals.
5. Concrete shall have a 28 day compressive strength of 3000 PSI.

	CITY OF RATHDRUM	APPROVED BY:
	STANDARD DRIVEWAY APPROACH	Public Works Director — Date 3/15/06

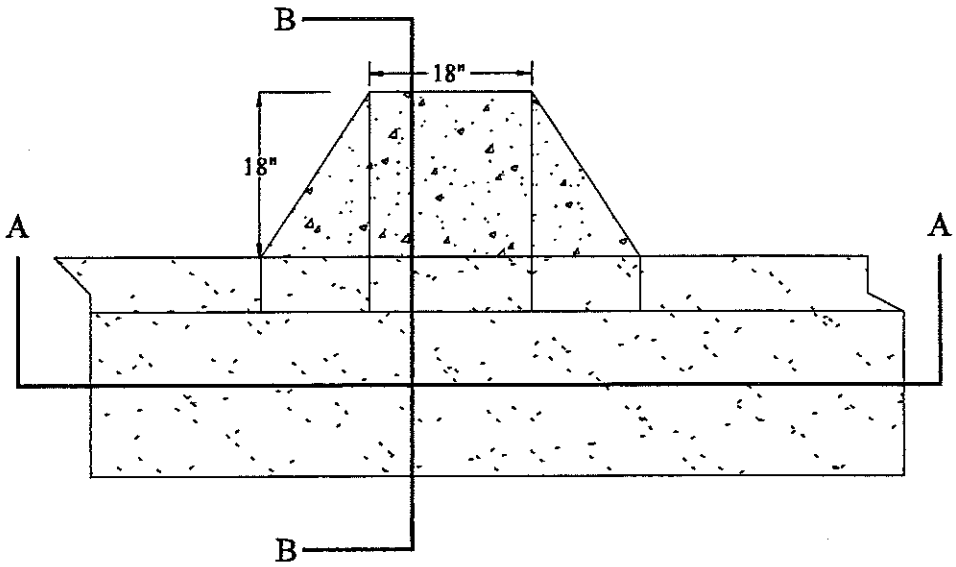

Plan View

No Scale

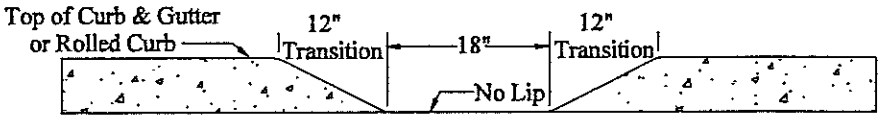

SECTION A-A

No Scale

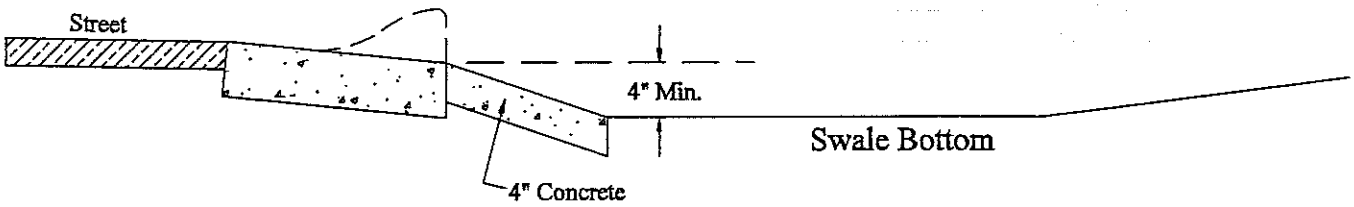

SECTION B-B

No Scale

NOTES:
Concrete spillway apron required for Grassy Infiltration Area drainage systems (swales)

	CITY OF RATHDRUM	APPROVED BY:
	CURB DRAIN INLET	Chet Anderson 1/11/05 Public Works Director Date

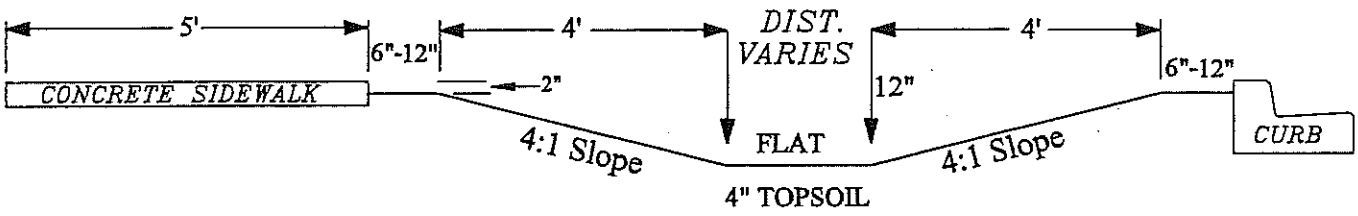

FREE DRAINING GRAVEL SOILS

No Scale

NOTES:

1. Maximum 3:1 slopes; Preferred 4:1 slopes.
2. Drywell topgrates 6" above swale bottoms.
3. Maximum 6" uncompacted & seeded topsoil.
4. All swales shall have a minimum infiltration rate of 0.5"/hr.
5. Culverts & piping for drainage NOT ALLOWED under driveway approaches -
6. Positive drainage flows must be provided from curb flowlines in/out swales.
7. Flat bottom swale required - No "V" ditchlines.

	CITY OF RATHDRUM	APPROVED BY:
	TYPICAL SWALE DESIGN	Chet Anderson 12/30/05 Public Works Director Date

The floor or landing at the exit door required by Section R311.4.1 shall not be more than 1.5 inches (38 mm) lower than the top of the threshold. The floor or landing at exterior doors other than the exit door required by Section R311.4.1 shall not be required to comply with this requirement but shall have a rise no greater than that permitted in Section R311.5.3.

Exception: The landing at an exterior doorway shall not be more than 7 ¾ inches (196 mm) below the top of the threshold, provided the door, other than an exterior storm or screen door does not swing over the landing.

The width of each landing shall not be less than the door served. Every landing shall have a minimum dimension of 36 inches (914 mm) measured in the direction of travel.

R311.4.4 Type of lock or latch. All egress doors shall be readily openable from the side from which egress is to be made without the use of a key or special knowledge or effort.

R311.5 Stairways

R311.5.1 Width. Stairways shall not be less than 36 inches (914 mm) in clear width at all points above the permitted handrail height and below the required headroom height. Handrails shall not project more than 4.5 inches (114 mm) on either side of the stairway and the minimum clear width of the stairway at and below the handrail height, including treads and landings, shall not be less than 31.5 inches (787 mm) where a
mm) where a handrail is installed on one side and 27 inches (698 mm) where handrails are provided on both sides.

Exception: The width of spiral stairways shall be in accordance with Section R311.5.8.

R311.5.2 Headroom. The minimum headroom in all parts of the stairway shall not be less than 6 feet 8 inches (2036 mm) measured vertically from the sloped plane adjoining the tread nosing or from the floor surface of the landing or platform.

R311.5.3 Stair treads and risers.

R311.5.3.1 Riser height. The maximum riser height shall be 7 ¾ inches (196 mm). The riser shall be measured vertically between leading edges of the adjacent treads. The greatest riser height within any flight of stairs shall not exceed the smallest by more than ⅜ inch (9.5 mm).

R311.5.3 Tread depth. The minimum tread depth shall be 10 inches (254 mm). The tread depth shall be measured horizontally between the vertical planes of the foremost projection of adjacent treads and at a right angle to the tread's leading edge. The greatest tread depth within any flight of stairs shall not exceed the smallest by more than ⅜ inch (9.5 mm). Winder treads shall have a minimum tread depth of 10 inches (254 mm) measured as above at a point 12 inches (305 mm) from the side where the treads are narrower. Winder treads shall have a minimum tread depth of 6 inches (152 mm) at any point. Within any flight of stairs, the greatest winder tread depth at the 12 inch (305 mm) walk line shall not exceed the smallest by more than ⅜ inch (9.5 mm)

R311.5.3.3 Profile. The radius of curvature at the leading edge of the tread shall be no greater than 9/16 (14.3 mm). A nosing not less than ¾ inch (19 mm) but not more than 1 ¼ inch (32 mm) shall be provided on stairways with solid risers. The greatest nosing projection shall not exceed the smallest nosing projection by more than ⅜ inch (9.5 mm) between two stories, including the nosing at the level of floors and landings. Beveling of nosing shall not exceed ½ inch (12.7 mm). Risers shall be vertical or sloped from the underside of the leading edge of the tread above at an angle not more than 30 (0.51 rad) degrees from the vertical. Open risers are permitted, provided that the opening between treads does not permit the passage of a 4 inch diameter (102 mm) sphere.

Exceptions:
1. A nosing is not required where the treads depth is a minimum of 11 inches (279 mm).
2. The opening between adjacent treads is not limited on stairs with a total rise of 30 inches (762 mm) or less.

R311.5.4 Landings for stairways. There shall be a floor or landing at the top and bottom of each stairway.

Exception: A floor or landing is not required at the top of an interior flight of stairs, provided a door does not swing over the stairs.

A flight of stairs shall not have a vertical rise greater
12 feet (3658 mm) between floor levels or landings.

The width of each landing shall not be less than the stairway served. Every landing shall have a minimum dimension of 36 inches (914 mm) measured in the direction of travel.

R311.5.5 Stairway walking surface. The walking surface of treads and landings of stairways shall be sloped no steeper than one unit vertical in 48 inches horizontal (2 percent slope).

R311.5.6 Handrails. Handrails shall be provided on at least one side of each continuous run of treads or flight with four or more risers.

R311.5.6.1 Height. Handrail height, measured vertically from the sloped plane adjoining the tread nosing, or finish surface of ramp slope, shall be not less than 34 inches (864 mm) and not more than 38 inches (965 mm).

R311.5.6.2 Continuity. Handrails for stairways shall be continuous for the full length of the flight, from a point directly above the top riser of the flight. Handrail ends shall be returned or shall terminate in newel posts or safety terminals. Handrails adjacent to a wall shall have a space of not less than 1 ½ inch (38 mm) between the wall and the handrails.

Exceptions:
1. Handrails shall be permitted to be interrupted by a newel post at the turn.
2. The use of a volute, turnout, starting easing or starting newel shall be allowed over the lowest tread.

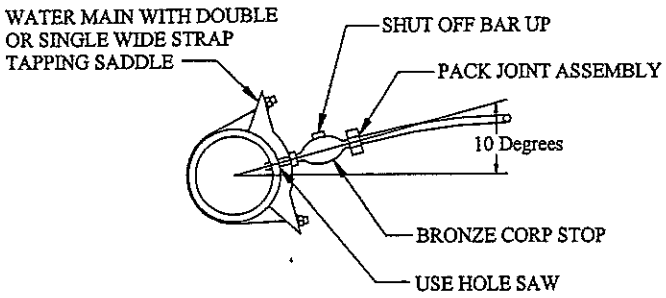

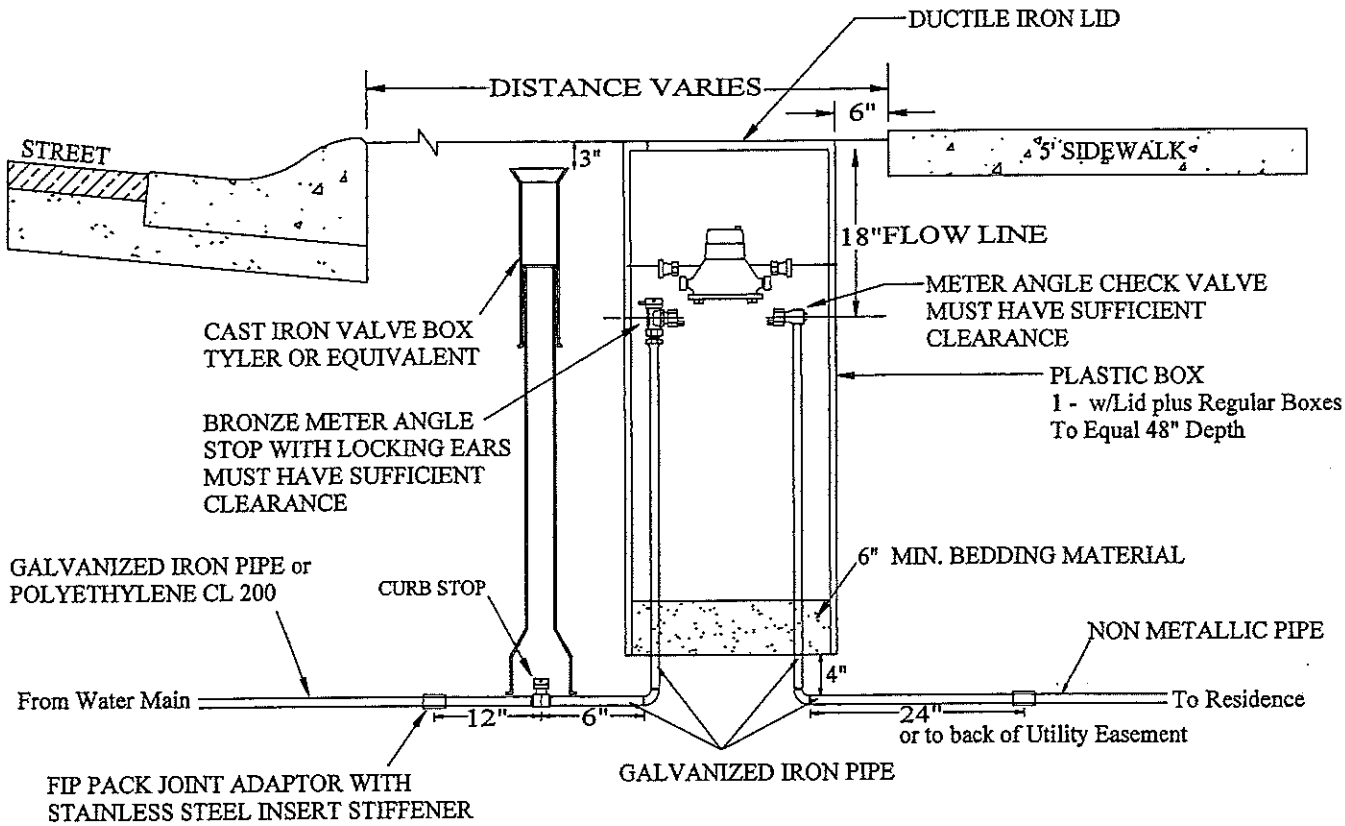

NOTES:

1. MID-STATES or RAVEN or Equivalent Plastic Boxes
2. Approved use of 1" COPPERSETTER- must incorporate stabilizer & tie bar.

	CITY OF RATHDRUM	APPROVED BY:
	WATER SERVICE CONNECTION	Public Works Director / Date

CITY OF RATHDRUM WATER SYSTEM

SHOULD THE WATER PRESSURE AT YOUR LOCATION BE MORE THAN 60 PSI, THE PUBLIC WORKS DEPARTMENT IS RECOMMENDING THAT A PRESSURE REDUCING VALVE BE INSTALLED IN YOUR WATER CONNECTION.

PLEASE NOTE:
PERMISSION MUST BE OBTAINED FROM THE PUBLIC WORKS DEPARTMENT PRIOR TO TAKING WATER FROM CITY HYDRANTS

City of Rathdrum
PUBLIC WORKS DEPARTMENT
8047 W. Main Street #2
Rathdrum, ID 83858
www.rathdrum.org

Public Works Department
Building Department
208-687-2700 ex16

Parks & Recreation
208-687-2399

Planning & Zoning
208-687-2700 ex17
Fax 208-687-1377

IRRIGATION & SPRINKLER SYSTEMS
Backflow Prevention Methods

- Sprinkler systems are considered *high hazard*

- PVB – Pressure Vacuum Breaker
  Used in a system which is under pressure more than 12 hours. Should be installed 12" above highest head in each zone to allow free drainage of surrounding ground. No chemicals can be injected or mixed into the system. No pressure source may exist on sprinkler side of device.

- AVB- Atmospheric Vacuum Breaker
  Used in a system under pressure less than 12 hours a day. Shall be installed 6" above surrounding ground and above a sufficient number of heads, as not to subject VB to back pressure or drainage. **NO SHUT-OFF VALVES DOWNSTREAM** of the device. No chemicals can be injected or mixed into the system. No pressure source may exist on sprinkler side of device.

- DC – Double Check Backflow Prevention Device
  May be used when people don't want VB to show. No chemical can be injected or mixed into the system.

- RP – Reduced Pressure Backflow Prevention Device
  Approved on any irrigation system. This device must be set a minimum of 12" above ground level or above flood level.

- *ALL ABOVE DEVICES SHALL BE TESTED BY A STATE CERTIFIED TESTER WHEN INSTALLED, REPAIRED, AND A MINIMUM OF ONCE A YEAR THEREAFTER. THE CITY OF RATHDRUM MUST BE NOTIFIED UPON INSTALLATION, REPAIR, AND TESTING OF ABOVE DEVICES.*

- Section 608 International Plumbing Code

- The piping above ground shall be galvanized or copper

- Dual check valves are not approved for sprinkler systems

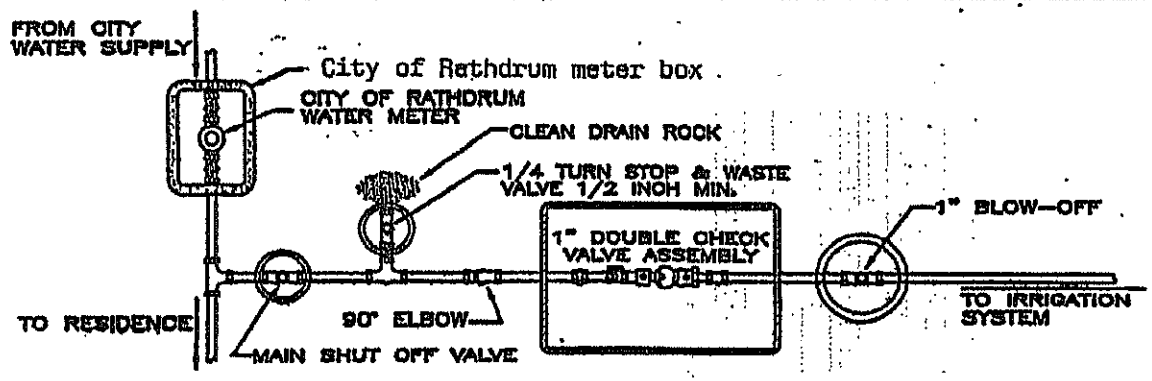

PLAN VIEW

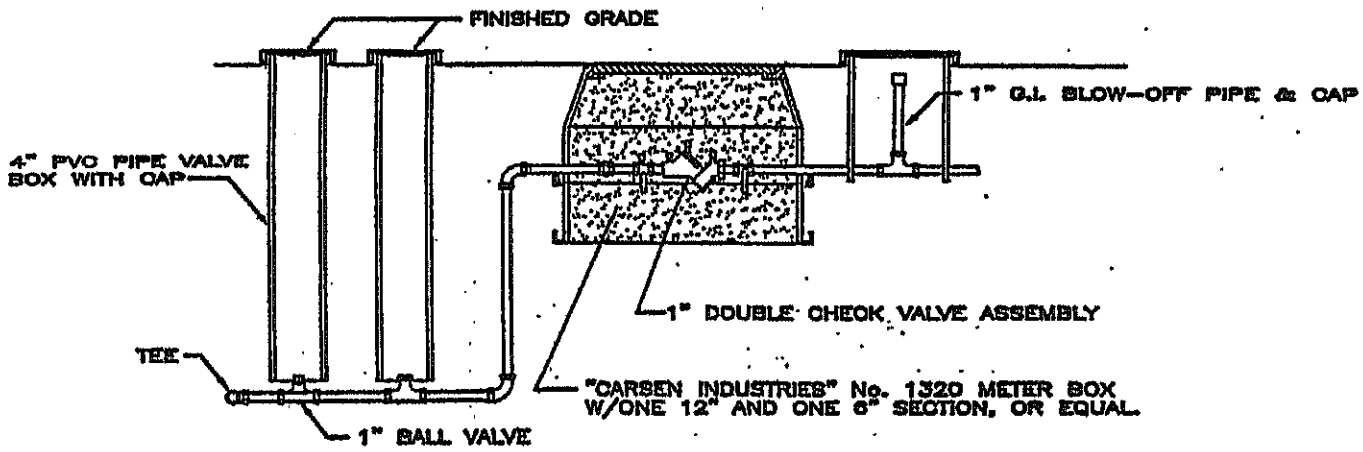

SECTION VIEW

APPROVED BY:		STANDARD DRAWING
CITY ENGINEER, P.E. DATE:	TYPICAL BACKFLOW PREVENTION	NO.

WOOD FRAME RESIDENTIAL STRUCTURES

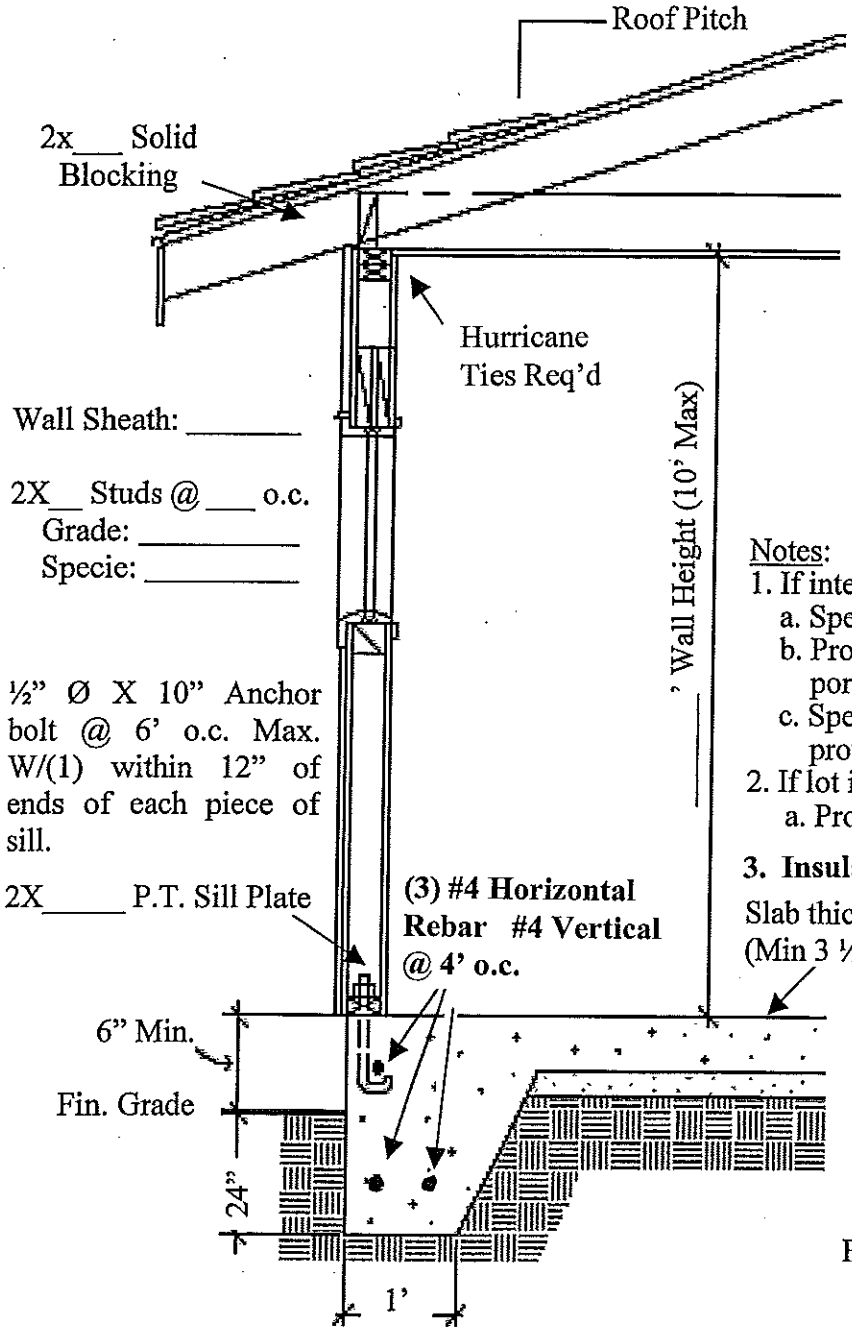

WALL SECTION – MONOLITHIC SLAB

Roofing:_____

Sheathing:_____

Roof Framing:
If using manufactured trusses, provide a copy of the truss sheet from the truss manufacturer or specify:

2X_____ Rafters @ _____" o.c.
Specie: _____, Grade: _____
2X_____ Ceiling Joists @ _____" o.c.
Specie: _____, Grade: _____

Notes:
1. If interior is finished,
   a. Specify finish material
   b. Provide Min. 22" X 30" attic access if any portion of attic is greater than 30" in height.
   c. Specify how attic ventilation will be provided.
2. If lot is not flat,
   a. Provide elevations showing finished grade.
3. **Insulation required in all heated structures.**

Slab thickness ____"
(Min 3 ½")

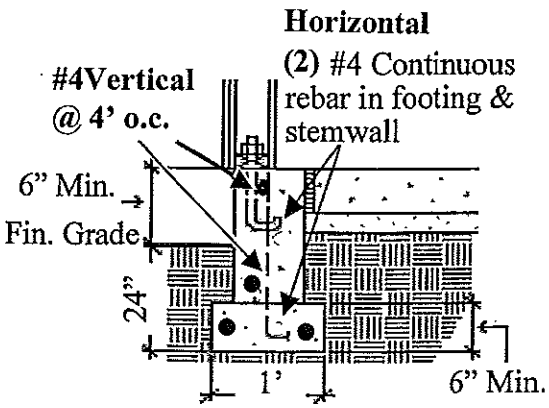

TYPICAL SINGLE STORY STEM WALL FOOTING

City of Rathdrum

PUBLIC WORKS DEPARTMENT

8047 W. Main Street #2

Rathdrum, ID 83858-6476

www.rathdrum.org

Public Works Department
Building Department
(208) 687-2700 x16

Parks & Recreation
(208) 687-2399

Planning & Zoning
(208) 687-2700 x17

Fax (208) 687-1377

MECHANICAL – METER UNLOCKS:

Over the past couple of years we've noticed an increase in requests for turn-ons related to drying out sheetrock in new homes. This practice has at times created an unsafe condition, and can cause long-term maintenance issues and possibly premature equipment failure.

It's been a long standing regulation that no meter will be unlocked until all the piping has been inspected and pressure tested by the local authority having jurisdiction. This practice will continue, and in addition, Avista has implemented some criteria for new natural gas installations that we believe will enhance safety and code compliance. Most of these items are already covered by code, and will likely not change the way you are currently operating.

In addition to the piping inspection, the following things must be done before the gas meter will be unlocked:

1. The furnace must be placed in it's permanent location
2. The piping must be appropriately sized for the furnace
3. The furnace must be controlled by a thermostat with proper wiring
4. The cold air return must be completed, including an air filter fitted to its assigned location
5. The furnace must be properly vented
6. The gas line must have a proper appliance valve in place with a flex connector per code
7. All other gas lines in the home must have an appliance valve in place and a cap or plug installed in the appliance valve

It's our hope that these measures will insure a safer installation. Please don't hesitate to contact us if you have questions.

Bill Baker
Avista Codes & Training Coordinator
(509) 889-6103

City of Rathdrum
(208) 687-2700

12/6/2006

NOTICE

EFFECTIVE DECEMBER 1, 1995 PORTABLE TOILETS WILL BE REQUIRED TO BE PLACED ON THE SITE OF EACH NEW BUILDING UNDER CONSTRUCTION.

NO BUILDING INSPECTIONS WILL BE DONE ON ANY SITE WITHOUT A PORTABLE TOILET.

THANK YOU
THE BUILDING DEPARTMENT

CITY OF RATHDRUM
PUBLIC WORKS DEPARTMENT

NOTICE:

THERE WILL BE NO WORK

DONE IN THE

CITY RIGHT-OF-WAY

AFTER DECEMBER 1st